ORIGINAL ARTICLE

The Cognitive and Affective Structure of Paranoid Delusions

A Transdiagnostic Investigation of Patients With Schizophrenia Spectrum Disorders and Depression

Richard P. Bentall, PhD; Georgina Rowse, ClinPsyD; Nick Shryane, PhD; Peter Kinderman, PhD; Robert Howard, MD, MRCPsych; Nigel Blackwood, MD; Rosie Moore, MSc; Rhiannon Corcoran, PhD

Context: Paranoid delusions are a common symptom of a range of psychotic disorders. A variety of psychological mechanisms have been implicated in their cause, including a tendency to jump to conclusions, an impairment in the ability to understand the mental states of other people (theory of mind), an abnormal anticipation of threat, and an abnormal explanatory style coupled with low self-esteem.

Objective: To determine the structure of the relationships among psychological mechanisms contributing to paranoia in a transdiagnostic sample.

Design: Cross-sectional design, with relationships between predictor variables and paranoia examined by structural equation models with latent variables.

Setting: Publicly funded psychiatric services in London and the North West of England.

Participants: One hundred seventy-three patients with schizophrenia spectrum disorders, major depression, or late-onset schizophrenia-like psychosis, subdivided according to whether they were currently experiencing paranoid delusions. Sixty-four healthy control participants matched for appropriate demographic variables were included.

Main Outcome Measures: Assessments of theory of mind, jumping to conclusions bias, and general intellectual functioning, with measures of threat anticipation, emotion, self-esteem, and explanatory style.

Results: The best fitting ($\chi^2_{96}=131.69$, $P=.01$; comparative fit index=0.95; Tucker-Lewis Index=0.96; root-mean-square error of approximation=0.04) and most parsimonious model of the data indicated that paranoid delusions are associated with a combination of pessimistic thinking style (low self-esteem, pessimistic explanatory style, and negative emotion) and impaired cognitive performance (executive functioning, tendency to jump to conclusions, and ability to reason about the mental states of others). Pessimistic thinking correlated highly with paranoia even when controlling for cognitive performance ($r=0.65$, $P<.001$), and cognitive performance correlated with paranoia when controlling for pessimism ($r=-0.34$, $P<.001$).

Conclusions: Both cognitive and emotion-related processes are involved in paranoid delusions. Treatment for paranoid patients should address both types of processes.

Arch Gen Psychiatry. 2009;66(3):236-247

RESEARCH OF PSYCHOTIC DISorders has been hampered by the heterogeneity of the phenomena to be explained and the lack of an agreed framework for integrating the wide range of abnormalities identified by biological and psychological investigators. In response to these challenges, some researchers have advocated for the identification of particular behavioral or cognitive markers of psychosis, which might be endophenotypes, that are suitable for further investigation by genetic methods,[1] and others have argued for the identification of transdiagnostic processes relating to particular symptoms.[2]

Paranoid delusions are a promising focus for both approaches, as they have already been the subject of considerable research.[3,4] Cross-cultural studies have shown that beliefs of this kind are the most common type of delusion found in psychotic patients.[5-8] They are observed not only in patients with a diagnosis of schizophrenia but also in patients with bipolar disorder[9] and major depression.[10] Subclinical forms of paranoid thinking are also detectable in healthy population samples.[11]

Although patients with paranoid delusions seem to perform normally on conventional measures of logical and heuristic reasoning[12] and hypothesis-testing ability[13] and their performance on neuro-

Author Affiliations are listed at the end of this article.

©2009 American Medical Association. All rights reserved.
Downloaded From: http://archpsyc.jamanetwork.com/ on 10/20/2016

psychological tests appears to be relatively preserved compared with that of psychotic patients with other kinds of symptoms,[14-17] there is evidence that paranoid delusions are associated with specific information-processing biases. A tendency to "jump to conclusions" in the face of probabilistic information has been reported in general in patients with delusions[18-22] and also in some[23] but not all[24] studies of patients with persecutory delusions specifically. Difficulty in reasoning about the mental states of other people (theory of mind deficits) have also been implicated in paranoia. Some studies have indicated that acutely ill paranoid patients, but not those in remission, perform poorly on theory of mind tasks,[23,25-31] implying that this kind of deficit might lead paranoid patients to misunderstand the intentions of others. Other studies, while finding that theory of mind deficits are evident in acutely ill psychotic patients in general, have questioned whether this impairment is specifically apparent in those who are paranoid.[32-35]

Other research has implicated emotion-related processes in paranoia. Several studies indicate that paranoid patients make inflated estimates of the likelihood of future threatening events[12,36] and that these estimates remain inflated even when their recall of past threatening events is controlled for.[37] Following the observation that paranoid patients tend to explain negative events in terms of causes that are external (caused by others or circumstances), global (likely to affect all areas of life), and stable (likely to persist),[28,38-41] it has been argued that these paranoia-inducing explanations reflect a dysfunctional strategy for avoiding low self-esteem.[3] However, some studies have failed to find a specific association between explanatory style and paranoia[42] or to find evidence of explanatory style abnormalities only in acutely ill paranoid patients, not in healthy individuals with subclinical paranoia.[43-46] Moreover, the hypothesis that paranoid reasoning has an emotionally protective function has been challenged[47] on the grounds that delusions in general[48] and paranoid delusions in particular are associated with very low self-esteem.[37] A weaker version of the defense hypothesis suggests that individuals with persecutory delusions will show a discrepancy between overt and covert self-esteem, even if overt self-esteem is not high. Some studies have reported this kind of overt vs covert self-esteem discrepancy in paranoid patients.[49-51]

Several limitations of existing studies constrain the extent to which the findings identify cognitive mechanisms that might form a focus for further biological and psychological investigation. First, most studies have investigated only patients with schizophrenia or delusional disorder, the exception being a series of our articles that also reported data from patients with major depression[23,37] and very late–onset schizophrenia-like psychosis.[31] The specificity of the observed cognitive and affective abnormalities to the symptom of paranoia, rather than diagnostic group, has usually not been addressed. Second, most studies have used only single measures of difficult-to-assess psychological processes, some with poor reliability (a problem that applies particularly to standard explanatory style measures[52]). Third, because participants have not been subjected to a comprehensive assessment battery, relationships between the relevant psychological constructs have hardly been explored. There is evidence that both theory of mind[53] and jumping to conclusions performances[54] are affected by executive functioning. Therefore, we hypothesize that these processes will be closely related. Conversely, because explanatory style, self-esteem, and mood are highly correlated in nonpsychotic samples,[55] we expect them to be closely correlated influences on paranoid thinking. Finally, in light of this reviewed research, we predict that both cognitive functioning and affect-related cognitive biases will independently contribute to paranoid delusions.

In this study, we report on an analysis of jumping to conclusions bias, theory of mind, explanatory style, self-esteem, and threat anticipation data collected from patients from diverse diagnostic groups, which enabled us to identify transdiagnostic cognitive and affective processes specifically associated with paranoia. We studied schizophrenic patients with paranoid delusions, schizophrenic patients whose paranoid delusions were in remission, depressed patients with paranoid delusions, and depressed patients without paranoid delusions. We also studied paranoid patients aged 65 years or older who had very late–onset schizophrenia-like psychosis, as this group of patients is thought to be distinct from those with schizophrenia and delusional disorder in terms of etiology and clinical features.[56] We also assessed depressed but nonparanoid patients aged 65 years or older. Finally, we assessed appropriately age-matched healthy controls. We used structural equation models with latent variables to study the association among these constructs and to estimate their relative contributions to paranoid thinking, allowing us to construct a comprehensive description of the cognitive and affective structure of paranoia.

METHODS

PARTICIPANTS

Table 1 gives demographic and cognitive details of the diagnostic groups included in the sample. There were 237 participants in the total sample, ranging in age from 20 to 94 years. Within this group, 173 patients with depressive and/or psychotic symptoms or related diagnoses were recruited from inpatient and outpatient clinics in South London and the North West of England. Informed consent was obtained using procedures agreed to by a multi-center research ethics committee. At the point of referral to the study, consultant psychiatrists responsible for the patients' usual care made diagnoses. Experienced research team members reviewed the diagnoses based on inspection of clinical case notes and an interview based on the initial screening questions from the Schedules for Clinical Assessment in Neuropsychiatry[57]; no diagnoses were revised for any patients. Patients were determined to be currently experiencing persecutory delusions if there was evidence of such delusions in clinical case notes and if they endorsed either of 2 items ("Do you ever feel as if you are being persecuted in some way?" and "Do you ever feel as if there is a conspiracy against you?") on the Peters Delusions Inventory (PDI),[58] chosen because of their clear paranoia content. Patients were determined to have experienced persecutory delusions that were currently in remission if there was evidence of such delusions in clinical case notes, if they answered negatively to both PDI questions for how they were currently feeling, and if they answered positively to either question about their past feelings.

©2009 American Medical Association. All rights reserved.
Downloaded From: http://archpsyc.jamanetwork.com/ on 10/20/2016

Table 1. Demographic and Cognitive Data by Group

Characteristic	Possible Range	Mean (SD)							
		Paranoid Patients				Depressed Patients		Healthy Controls	
		Current (n=36-39)	Remitted (n=27-29)	Late Onset (≥65 y) (n=27-29)	Comorbid Patients (n=18-20)	<65 y (n=26-27)	≥65 y (n=27-29)	<65 y (n=32-33)	≥65 y (n=30-31)
Sex, No.									
M		26	18	10	11	9	14	14	9
F		13	11	19	9	18	15	19	22
Age, y		33.95 (8.38)	34.66 (10.35)	76.90 (5.99)	36.00 (10.01)	48.37 (10.97)	77.59 (8.06)	39.03 (13.96)	75.61 (5.54)
Age at onset, y		23.00 (7.33)	21.82 (5.81)	72.38 (6.87)	23.53 (11.63)	29.11 (14.45)	70.59 (6.87)		
Equivalent CPZ dose, mg		417.13 (510.51)	227.78 (261.14)	69.93 (68.74)	17.50 (37.36)	5.56 (28.87)	0.00 (0.00)	0.00 (0.00)	0.00 (0.00)
Full-time education, y		12 (3.4)	13 (3.3)	10 (2.2)	13 (2.8)	14 (3.3)	10 (1.6)	13 (2.4)	11 (2.8)
HADS score									
Anxiety scale	0-21	9.97 (5.07)	9.31 (3.63)	8.03 (4.92)	13.75 (5.14)	12.04 (4.03)	9.93 (4.90)	4.45 (2.94)	5.13 (4.04)
Depression scale	0-21	8.33 (4.75)	6.07 (3.78)	5.76 (4.59)	13.15 (4.38)	13.59 (3.92)	10.66 (3.06)	2.00 (1.66)	2.77 (2.39)
Self-Esteem Scale score									
Negative	20-140	72.53 (25.78)	65.30 (22.45)	56.78 (23.49)	93.56 (22.44)	81.81 (21.28)	70.04 (26.74)	45.88 (10.72)	46.97 (19.36)
Positive	20-140	89.95 (26.85)	92.37 (22.47)	91.63 (25.68)	65.22 (20.99)	71.19 (19.69)	82.59 (25.25)	105.39 (11.23)	104.17 (13.91)
Beads in jar score	1-20	3.08 (2.68)	5.74 (4.62)	3.73 (4.13)	3.95 (1.94)	5.09 (2.17)	4.07 (5.43)	5.59 (3.20)	4.88 (4.44)
Beads in jar, social task score	1-20	3.22 (2.40)	4.84 (4.60)	3.52 (4.46)	3.42 (2.12)	4.96 (3.97)	4.36 (5.43)	4.93 (3.08)	4.62 (5.24)
WASI IQ		92.18 (10.74)	98.48 (13.17)	93.10 (14.13)	98.50 (15.57)	108.2 (12.99)	93.48 (14.32)	108.64 (14.48)	104.97 (16.21)
Verbal	20-80	45.62 (10.62)	49.97 (10.03)	45.21 (10.86)	51.10 (9.73)	56.07 (10.43)	47.03 (11.32)	56.16 (11.09)	53.29 (9.85)
Matrix reasoning	20-80	44.49 (7.64)	47.38 (9.91)	45.76 (10.60)	45.80 (11.50)	53.37 (7.67)	45.28 (11.45)	53.88 (8.81)	51.90 (11.89)
Backward digit span score		5.59 (2.09)	5.69 (2.16)	5.14 (2.41)	5.65 (2.48)	6.96 (2.65)	5.31 (2.44)	7.30 (2.69)	7.26 (2.46)
Theory of mind stories–deception, % correct									
First-order task	0-100	86.32 (27.27)	96.43 (10.50)	79.76 (29.17)	94.44 (17.15)	100 (0)	91.36 (17.52)	100 (0)	96.77 (10.02)
Second-order task	0-100	59.83 (34.35)	61.90 (38.18)	28.57 (29.70)	55.56 (32.34)	67.90 (35.18)	40.74 (35.00)	66.67 (34.36)	55.91 (34.84)
Persecutory delusions items on the PDI	0-4	3.18 (0.90)	2.11 (1.05)	2.21 (1.15)	2.65 (0.99)	0.30 (0.82)	0.31 (0.71)	0.03 (0.17)	0.19 (0.60)
Anticipation of threat score	1-7	3.73 (1.64)	3.07 (1.22)	2.51 (1.45)	3.69 (1.22)	2.21 (1.03)	1.85 (0.99)	2.29 (0.84)	1.46 (0.63)
ASQ negative events items									
Stability	1-7	4.72 (1.30)	4.89 (0.87)	4.53 (1.36)	5.43 (0.83)	4.92 (0.98)	4.51 (1.20)	4.29 (0.91)	4.39 (1.29)
Globality	1-7	4.41 (1.23)	4.27 (1.37)	3.83 (1.65)	4.64 (1.14)	4.40 (1.21)	3.96 (1.46)	3.48 (1.14)	3.10 (1.40)

Abbreviations: ASQ, Attributional Style Questionnaire; CPZ, chlorpromazine; HADS, Hospital Anxiety and Depression Scale; PDI, Peters Delusions Inventory; WASI, Wechsler Abbreviated Scale of Intelligence.

Patients were assessed as having never had persecutory delusions if there was no evidence for their presence in case notes and if they answered negatively to both PDI questions regarding their past or current experiences.

Eighty-eight patients were found to be currently experiencing paranoid delusions. A younger paranoid group consisted of 39 patients aged younger than 65 years with diagnoses of schizophrenia (n=35) or schizoaffective disorder (n=4). An older paranoid group (≥65 years) consisted of 29 patients diagnosed with very late–onset schizophrenia-like psychosis (n=27) or delusional disorder (n=2). A depressed and paranoid group consisted of 20 patients younger than 65 years with diagnosed major depression with psychotic features (n=16) or major depressive disorder (n=4).

A remitted paranoid group of 29 patients younger than 65 years had diagnoses of schizophrenia (n=23) or schizoaffective disorder (n=6). They all had a history of paranoia in their case notes, and while they did not endorse items 4 or 5 on the PDI when asked about current symptoms, they did report that they had felt persecuted in the past.

Fifty-six patients with diagnosed major depression had no history or presentation of paranoid ideation. Of these patients, the older depressed group (n=29) had received their diagnosis at or after the age of 65 years; the remaining patients, the younger depressed group (n=27), had depression diagnosed before age 65 years.

Finally, 64 healthy adult participants were included: 33 were younger (<65 years of age) and were recruited by advertisement; the remaining 31 were older and were recruited from lunch clubs for older people in local areas. The initial screening questions from the Schedules for Clinical Assessment in Neuropsychiatry were used to determine that the healthy controls were symptom-free.

The presence of clear negative signs and overt thought disorder were exclusion criteria for the psychotic patient groups, because these symptoms are known to be related to impaired cognitive functioning,[59,60] hence raising the possibility of confounding, and because they would make some of the lengthy assessments difficult. When the paranoid and nonparanoid patients were compared, no significant differences were observed in the presence of other positive schizophrenia symptoms or signs as assessed by the Schedules for Clinical Assessment in Neuropsychiatry (ie, depersonalization, hallucinations, perceptual experiences, incoherent speech; χ^2 analysis results were all nonsignificant). For all of the older participants, a diagnosis of cognitive impairment or a score of less than 28 out of 30 on the Mini-Mental State Examination were the exclusion criteria.

©2009 American Medical Association. All rights reserved.
Downloaded From: http://archpsyc.jamanetwork.com/ on 10/20/2016

Thirty-six currently paranoid patients, 28 remitted paranoid patients, 12 depressed and paranoid patients, 26 patients with late-onset paranoia, 2 depressed patients, and 2 older depressed patients received antipsychotic medication. The mean doses of antipsychotic treatment for those treated in each group, expressed in chlorpromazine equivalents, are given in Table 1.

MAIN OUTCOME MEASURES

Paranoid Beliefs

The PDI,[58] which has items derived from the delusions questions in the Schedules for Clinical Assessment in Neuropsychiatry,[57] was used to assess the presence of paranoid beliefs in this study. It was chosen for this purpose because, among measures of delusional thinking, it has been shown to have uniquely good reliability and validity in both clinical and nonclinical populations and because it included items that could be used to generate a good measurement model of paranoia severity.[36]

Anticipation of Threat

This task provided data on the prediction of the future likelihood of events happening to the participants. The task incorporates 7 neutral items (eg, "How likely is it that you will be asked the time in the next week?"), 7 positive/pleasant items (eg, "How likely is it that you will be congratulated for doing something well?"), and 7 negative/threatening items (eg, "How likely is it that you will be lied to?"). The stimuli were presented in 1 of 2 fixed pseudorandom sequences. Participants were asked to predict, using a scale from 1 to 7 (1, not at all; 7, very likely), the likelihood of each event happening to them in the coming week (inpatients were asked to estimate for the week they were to leave hospital).

Mood

The Hospital Anxiety and Depression Scale[61] provided an assessment of mood. This scale is made up of 7 items related to anxiety and 7 related to depression. Participants rate each item from 0 to 3 based on how they have been feeling in the past week. α Coefficients of 0.83 and 0.82 have been reported for the subscales.[62]

Self-esteem

Self-esteem was measured using the Self-Esteem Rating Scale,[63] which consists of 20 positive statements and 20 negative statements about oneself. Participants rate each statement from 1 (never) to 7 (always). This scale has good psychometric properties when used to assess psychotic patients.[64]

Attributional Style

The Attributional Style Questionnaire (ASQ)[65] is a 12-item scale used to assess how participants attribute causes of events. Participants are asked to generate explanations for 6 negative and 6 positive events and then to rate the hypothetical causes of the events on 7-point Likert scales of internality ("Is the cause due to something about you or something about other people or circumstances?"), stability ("In the future, in similar situations, will this cause again be present?"), and globality ("Is this cause something that affects only this type of situation, or does it also influence other areas of your life?"). We chose this scale over others because it is has been more widely used in paranoia research than any other explanatory style measure and because, in contrast to some alternatives,[66] it provides ratings of globality and stability. However, a 3-factor measurement model of the negative ASQ items—with factors for internality, stability, and globality—had poor measurement properties ($\chi^2_{132}=244.114$; comparative fit index [CFI] = 0.785; Tucker-Lewis Index [TLI] = 0.75; root-mean-square error of approximation [RMSEA] = 0.061), which were attributable to the internality dimension (N.S. et al, unsubmitted data, 2002-2005). Therefore, only the stability and globality subscales are included in the analysis that follows.

Jumping to Conclusions

The tendency to jump to conclusions on probabilistic reasoning tasks was assessed by a version of the beads in a jar task, developed originally for studies of obsessive-compulsive patients.[67] This task was first used with patients with delusions by Garety and colleagues[19] and has been widely used with psychotic patients since.[20,68] Participants are shown 2 jars containing a mixture of black (B) and yellow (Y) beads; in this version of the task, the ratio of the colors was 60:40 and 40:60 in the 2 jars. After the jars had been hidden, the participants were shown beads apparently drawn from 1 of the 2 jars until they felt confident that they knew which of the jars the beads came from. Researchers recorded the number of beads requested before a jar was chosen. Each participant was presented with the same 3 sequences of black and yellow beads (sequence 1, BYBBBBYBBBYBYYYYBYYY; sequence 2, BYBBBYBBYBYBBBBYYBBY; and sequence 3, YBYYYYBYYYBYBBBBYBBB).

A social version of the beads in a jar task[69] was used as a measure of the tendency to jump to conclusions when considering more salient information. In this task, participants were presented with 2 surveys containing 100 comments about a person. They were told that survey A contained 60 negative and 40 positive comments, while survey B contained 60 positive and 40 negative comments. Participants could see as many comments as they needed before deciding which of the 2 surveys they came from. The number of comments requested before the survey chosen was recorded. The same 3 random sequences used in the beads task were used for each participant.

Theory of Mind–Deception

Three theory of mind stories were used to assess understanding of intentional deception. Data from this measure for a subsample of the present participants with very late–onset schizophrenia-like psychosis have been previously reported.[31] The stories were read to participants; the stories were accompanied by a set of cartoon pictures depicting events in the story. At set points during the course of the story, participants were asked questions to assess theory of mind, narrative memory, and non–mental state inference skills. Some questions required first-order theory of mind inferences (the participant had to infer what a story character was thinking) and others required second-order inferences (the participant had to imagine what a character believed about the thoughts of someone else in the story). The ability to understand deception as opposed to false belief was considered to be particularly relevant to the presence of persecutory delusion, because the intention to deceive is more clearly associated with potentially malign intent.

Intellectual functioning was assessed using the vocabulary and matrix reasoning subscales of the Wechsler Abbreviated Scale of Intelligence[70] to give a measure of current IQ. Short-term memory was assessed using the backward digit span task.[70]

©2009 American Medical Association. All rights reserved.
Downloaded From: http://archpsyc.jamanetwork.com/ on 10/20/2016

Because of the large number of assessments and the sample sizes used, even partial counterbalancing would not have been practical. Instead, we sought to control practice, fatigue, and presentation-order effects by keeping the presentation order constant.

STATISTICAL ANALYSIS

To fully exploit the rich variety of measures taken in this study, we used a strongly multivariate approach using structural equation models with latent variables. Latent variables are used to represent the unmeasured constructs that are assumed to give rise to the observed responses. The relationships among latent constructs can then be investigated directly, controlling for the effects of measurement error in the observed responses that can seriously bias findings.[71,72]

A series of models was fitted in Mplus 4.1[73] using a weighted least-squares estimator, which has been found to give good results in models with nonnormally distributed responses (eg, binary and ordinal, as used herein) in samples as small as 200.[74] It is also robust to data missing at random,[75] though in practice, this was not important, as missing data were rare (<1% of potential responses).

Our analysis strategy entailed specifying a number of theoretically plausible models a priori and then comparing the fit of these models to the observed data. Model fit was assessed using 4 indices. Goodness-of-fit χ^2 test analyzes the target model against an unconstrained model that exactly matches the observed covariances. Larger χ^2 values therefore indicate greater misfit. The χ^2 statistic is sample size–dependent and may reject even well-fitting models in moderately large samples.[76] The TLI[77] and CFI[78] have the advantage of being relatively independent of sample size. They compare the fit of the specified model with that of a null model of uncorrelated responses; both indices range from 0 to 1, and values greater than 0.95 are conventionally considered to represent a good fit.[79] These indices do not take into account model parsimony, so we used RMSEA,[80] which penalizes for model complexity by measuring the amount of model misfit per *df*; values less than 0.06 are recommended.[79]

Hypothesized Model Structure

We hypothesized that the observed measures could be represented by a multidimensional confirmatory factor analysis model, in which sets of observed variables are seen as fallible indicators of underlying, latent factors. We hypothesized the existence of the following latent factors:

- Paranoid beliefs were indicated by a participant's endorsement of 4 persecutory delusions items of the PDI (those used to assign patients to groups and 2 additional items: "Do you ever feel that someone is trying to deliberately harm you?" and "Do you ever think that everyone is gossiping about you?"). We did not use separate subscale scores for conviction, distress, or preoccupation for these items, as they correlated so highly (Spearman $\rho > 0.91$) that including them in our models made no appreciable difference in the results.
- Anticipation of threat was indicated by responses to the 7 negative/threatening items from the Anticipation of Negative Events task.
- Stable attributions for negative events were indicated by the responses to the 6 items of the ASQ that assessed respondents' beliefs that the causes of negative events were stable and unchangeable.
- Global attributions for negative events were indicated by the 6 ASQ items that assessed respondents' beliefs that the identified causes for negative events were likely to affect all domains of life (as opposed to just particular events).
- Theory of mind–deception was indicated by responses to the 6 items from the theory of mind stories task that addressed the ability to identify first-order (3 items) and second-order (3 items) deception.
- Jumping to conclusions bias was indicated by the number of draws to decision of the 3 trials of the beads in a jar task and 3 trials of the social version of the same task.
- Self-esteem was indicated by the aggregated scale scores for the 2 scales (positive and negative) of the Self-Esteem Rating Scale.
- Depression and anxiety were indicated by the aggregated scale scores for the depression and anxiety scales of the Hospital Anxiety and Depression Scale.[1]
- Intellectual functioning had 3 indicators: the aggregated scale scores for the verbal and matrix reasoning scales of the Wechsler Abbreviated Scale of Intelligence and verbal working memory as assessed by participants' backward digit span task result.

Response Models

In latent variable modeling, the nature of the relationship between the latent factor and the observed indicators must be specified. The latent variables stable attributions for negative events, global attributions for negative events, self-esteem, depression and anxiety, and intellectual functioning had approximately normally distributed indicator variables, so straightforward linear relationships were specified. The indicators for the jumping to conclusions latent variable were positively skewed, but a natural log transformation produced acceptable normality. Therefore, the transformed jumping to conclusions responses were modeled in the same way. The indicators for the paranoid beliefs and theory of mind–deception latent variables had binary (yes/no) responses and were therefore unsuitable for confirmatory factor models designed for continuous, normally distributed responses. Instead, the probability of yes responses was modeled using 2-parameter item response theory models.[81]

Responses to anticipation of threat, on 8-point Likert scales, were severely skewed and could not be normalized by transformation. They were therefore modeled as 3-point ordinal responses (low [0-2], medium [3-5], and high [6-7] likelihoods), using a graded item response theory model.[82]

RESULTS

Table 1 presents summary data for the various measures for each group. Analyses of the ASQ have shown that it is affected by statistical bias because each question scenario is used to generate responses on multiple scales.[83,84] This results in the correlations among ASQ scores being artificially inflated. To compensate in the present model, we allowed the residual variances between matching stable attributions for negative events and global attributions for negative events items to be correlated. All other residual variances were independent. One of the loadings for each latent variable was fixed to 1 to statistically identify the model. The latent factors were allowed to correlate freely.

The resulting model, model 1, had 158 free parameters and gave a good fit to the data, with all factor indicators significant ($P < .01$) and all model fit indices within recommended cutoffs ($\chi^2_{100} = 133.99$, $P = .01$; CFI = 0.95; TLI = 0.97; RMSEA = 0.04). However, the self-esteem and depression/anxiety latent variables were highly corre-

©2009 American Medical Association. All rights reserved.
Downloaded From: http://archpsyc.jamanetwork.com/ on 10/20/2016

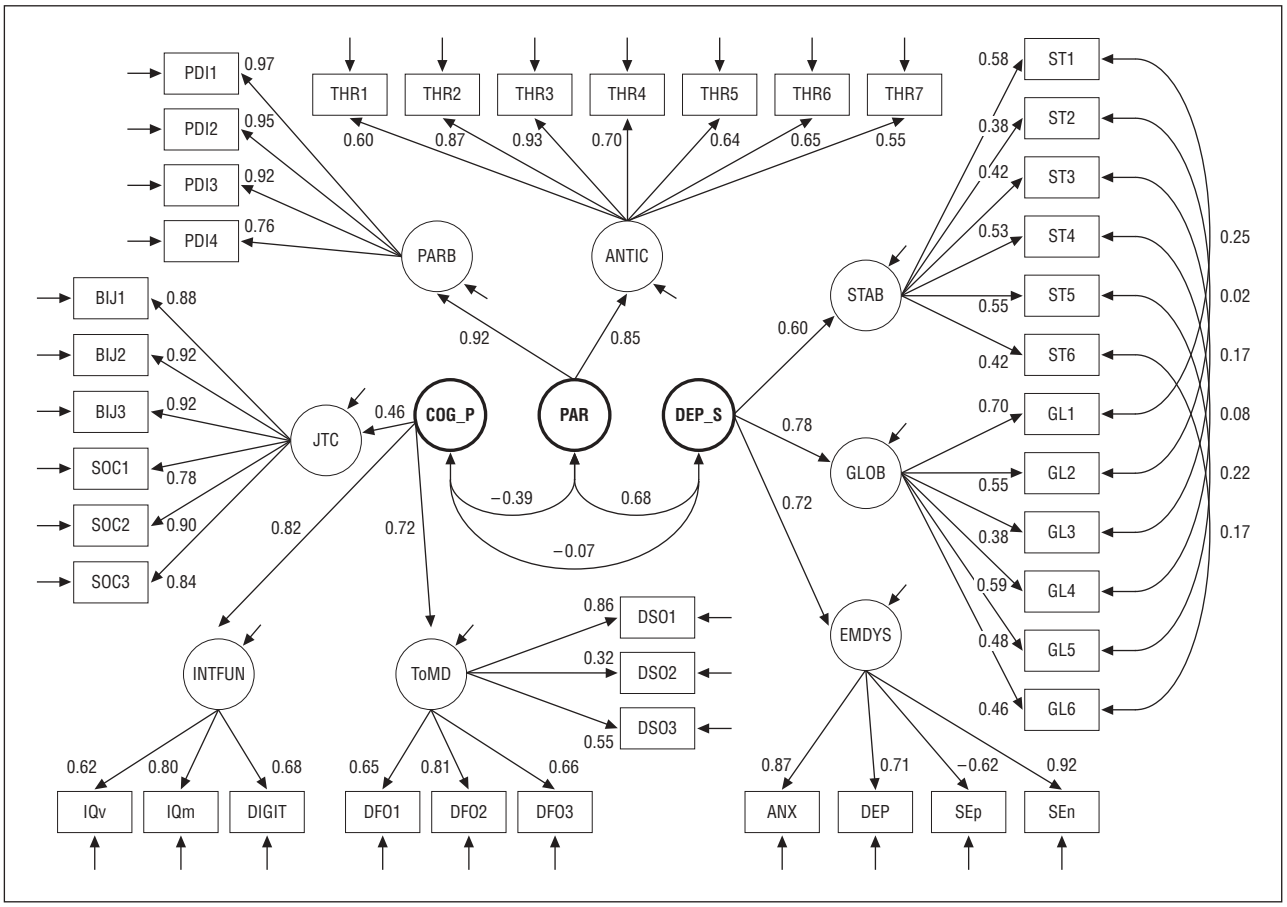

Figure 1. Path diagram of confirmatory factor analysis model 4. Model fit: χ^2_{96}=131.69, *P*=.01; comparative fit index=0.95; Tucker-Lewis Index=0.96; root-mean-square error of approximation=0.04. One hundred thirty-three free parameters. Second-order latent variables (COG_P indicates cognitive performance; PAR, paranoia; DEP_S, depressive thinking style) are shown in bold. Other variables are paranoid beliefs (PARB) (Peters Delusions Inventory items); anticipation of threat (ANTIC); jumping to conclusions (JTC); intellectual functioning (INTFUN) (Wechsler Adult Intelligence Scale [WAIS] vocabulary, WAIS matrix reasoning, and backwards digit span tests); theory of mind (ToMD) deception (first and second order); stability judgments for negative events (STAB); globalness judgments for negative events (GLOB); and emotional dysregulation (EMDYS) (consisting of anxiety [ANX]; depression [DEP]; positive self-esteem [SEp]; negative self-esteem [SEn]).

lated, which suggests the presence of a single factor (r=0.89). We ran a second confirmatory factor analysis model, model 2, with a single latent variable for the self-esteem and depression/anxiety scale scores, which we named *emotional dysregulation*. Model 2 was more parsimonious than model 1 (having 150 free parameters), but it gave an almost identically good model fit (χ^2_{101}=135.40, *P*=.01; CFI=0.95; TLI=0.97; RMSEA=0.04).

Model 2 still lacked parsimony, using an unrestricted correlation matrix with 28 free parameters to characterize the relationships among the latent constructs. We hypothesized that a much simpler latent structure was likely to pertain, whereby the latent variables could be grouped into phenomena associated with paranoia and with depression. To represent this conceptual structure, we introduced a second-order latent factor structure, ie, further latent variables indicated by the first-order latent variables. Two competing models were hypothesized. Model 3 was specified with 2 second-order latent variables: paranoid style (indicated by paranoid beliefs, anticipation of threat, theory of mind–deception, jumping to conclusions bias, and intellectual functioning) and depressive style (indicated by emotional dysregulation, stable attributions for negative events, and global attributions for negative events). In model 4, the paranoid style second-order latent variable from model 3 was divided into 2 second-order factors, reflecting the distinction between the subjective reporting of paranoid symptoms and the associated pattern of deficits on cognitive tasks: paranoia (indicated by paranoid beliefs and anticipation of threat) and cognitive performance (indicated by theory of mind–deception, jumping to conclusions bias, and intellectual functioning). The depressive style factor was retained unaltered in model 4.

Model 3 gave a much worse fit to the data than model 2, with a highly significant χ^2 value and all other indices outside of recommended cutoffs (χ^2_{94}=187.11, $P<.001$; CFI=0.88; TLI=0.90; RMSEA=0.07). This suggested that a second-order structure containing just 2 latent constructs was too simplistic. Model 4 had a better fit than model 2 (χ^2_{96}=131.69, *P*=.01; CFI=0.95; TLI=0.96; RMSEA=0.04) despite having 17 fewer parameters. Model 4 was the best of the fitted models, representing the diverse collection of measured constructs using just 3 second-order factors: paranoia, cognitive performance, and depressive style. A path diagram of model 4 is shown in **Figure 1**.

All factor indicators had significant loadings ($P<.05$). The depressive style and paranoia second-order factors

©2009 American Medical Association. All rights reserved.
Downloaded From: http://archpsyc.jamanetwork.com/ on 10/20/2016

Table 2. Proportion of Variance in First-Order Factors Explained by Second-Order Factors

First-Order Factor	R^2
Paranoid beliefs	0.85
Anticipation of threat	0.73
Jumping to conclusions bias	0.21
Theory of mind	0.52
Intellectual functioning	0.67
Emotional dysregulation	0.52
Stable attributions for negative events	0.36
Global attributions for negative events	0.61

were highly positively correlated ($r=0.68$, $P<.001$). The paranoid and cognitive performance factors were negatively correlated ($r=-0.39$, $P<.001$), so that a high degree of paranoid ideation and threat expectation was associated with low levels of general intellectual functioning, deception awareness, and a jumping to conclusions data gathering bias, and vice versa. The depressive thinking style and cognitive performance factors were not significantly correlated ($r=-0.07$, $P=.48$) so that, though paranoid beliefs and depressive style were highly related, there was independence between depressive style and cognitive performance.

PARTIAL CORRELATIONS AMONG SECOND-ORDER CONSTRUCTS

We evaluated the correlation between each pair of second-order latent variables while controlling for the third. Each of these models is equivalent to model 4 in the technical sense suggested by MacCallum et al.[85] This means that they are equally parsimonious and have identical model fit indices. However, they package the covariance in slightly different ways and therefore reveal the unique relationships among the second-order latent constructs.

Model 5 assessed the correlation between cognitive performance and depressive thinking style after controlling for the second-order paranoia factor (ie, cognitive performance and depressive style were regressed on paranoia). The correlation between depressive style and cognitive performance in this model was still nonsignificant ($r=0.19$, $P<.05$). Model 6 regressed paranoia and cognitive performance on depressive style. Controlling for depressive style in this way had only a slight effect; the correlation between paranoia and cognitive performance ($r=-0.34$, $P<.001$) was almost the same as the zero-order correlation found in model 4 ($r=-0.39$). Model 7 allowed depressive style and paranoid beliefs to correlate, controlling for cognitive performance. The correlation of $r=0.65$ ($P<.001$) was very similar to the zero-order correlation ($r=0.68$). These findings further confirmed that cognitive performance was uniquely associated with paranoia and that this relationship was not affected by variation in depressive style.

POTENTIAL CONFOUNDING EFFECTS OF AGE AND SEX

There was a broad range of ages in the present sample. Age tends to be correlated with cognitive performance in general and in the present sample was also correlated with paranoid symptoms, because most paranoid participants were from the younger age group. We therefore ran additional models to check that the relationships among the second-order factors were not merely due to the confounding effects of age. Sex was also included for completeness. Models 4A, 5A, 6A, and 7A were fitted, identical to models 4 through 7, respectively, but with each of the second-order factors regressed on age (which was centered on the sample mean) and sex (dummy coded).

Model fit for the new models ($\chi^2_{110}=155.81$, $P=.03$; CFI=0.95; TLI=0.95; RMSEA=0.04) was slightly worse than for model 4, which did not control for age and sex. For all of these models, age was significantly but negatively related to each of the second-order latent variables (paranoid beliefs, $\beta=-0.46$, $P<.001$; cognitive performance, $\beta=-0.30$, $P<.001$; depressive style, $\beta=-0.25$, $P<.01$). Male patients reported more paranoid beliefs than female patients ($\beta=0.18$, $P<.01$). After controlling for these variables, the pattern of correlations among the second-order latent variables found in the previous models was essentially the same (for example, for model 4A, paranoia correlated with cognitive performance [$r=-0.56$, $P<.001$] and with depressive style [$r=0.55$, $P<.001$]; depressive style did not correlate with cognitive performance [$r=0.16$, $P>.05$]). This pattern of results therefore appeared robust to the potentially confounding effects of age and sex.

PROPORTION OF VARIANCE

Table 2 presents the proportion of variance in the first-order factors accounted for by the second-order factors in model 4. The paranoia factor was the one best represented by the higher-level structure, with both the paranoid beliefs and anticipation of threat factors having very high R^2 values. The depressive thinking style second-order factor had reasonable R^2 values, given the broad conceptual basis of the underlying constructs, though the attributional stability first-order factor was somewhat weakly characterized by the second-order factors. The cognitive performance factor well represented the general intellectual functioning and theory of mind factors, but the jumping to conclusions factor had the lowest R^2 value of the first-order factors.

POSSIBLE MISSPECIFICATION OF JUMPING TO CONCLUSIONS FACTOR

Several studies have found that the jumping to conclusions bias is particularly related to delusional thinking.[22] There was therefore a possibility that the low R^2 value of the jumping to conclusions factor was a result of a model misspecification. The relationship between jumping to conclusions and paranoia may not have been fully expressed by the indirect pathway via general cognitive performance (Figure 1). To test this possibility, an additional path was added to model 4, regressing the first-order jumping to conclusions factor directly on second-order paranoia. The effect of this addition on model fit could be assessed formally using a likelihood-ratio test

©2009 American Medical Association. All rights reserved.
Downloaded From: http://archpsyc.jamanetwork.com/ on 10/20/2016

because model 4 was nested in the model that included the extra path (ie, the parameters of model 4 formed a subset of those of the new model). The scaled likelihood ratio test[86] (appropriate when responses are not normally distributed) was not significant (χ^2_1=0.04, P=.96). Therefore, there appeared to be no association between paranoia and jumping to conclusions over and above that accounted for by the relationship between paranoia and general cognitive performance.

RELATIONSHIP TO DIAGNOSIS

To gain some prima facie evidence of the validity of the second-order factors, we investigated the distribution of latent scores by diagnostic group. Empirical Bayes scoring[87] was used to estimate the second-order factor scores for each participant, based on the estimated parameters from model 4. The distributions of the resulting standardized (z) scores are shown for each group in **Figure 2**.

The estimated factor scores are not suitable to be used as dependent variables in subsequent statistical analyses.[88] Therefore, the reported 95% confidence intervals are not appropriate for formally testing group differences. However, these descriptive results supported the validity of the second-order factors, with the scores mapping well on the diagnostic groups. The paranoia scores showed a clear distinction between groups with paranoid delusions and those without. All of the clinical groups had noticeably higher depressive style scores than the 2 control groups (and they were particularly high for the comorbid group). There was also a tendency for the clinical groups with older participants to have lower depressive style scores than the diagnostically equivalent younger groups. The paranoid groups had lower mean scores on cognitive performance than the other groups, with the exception of the older depressed group.

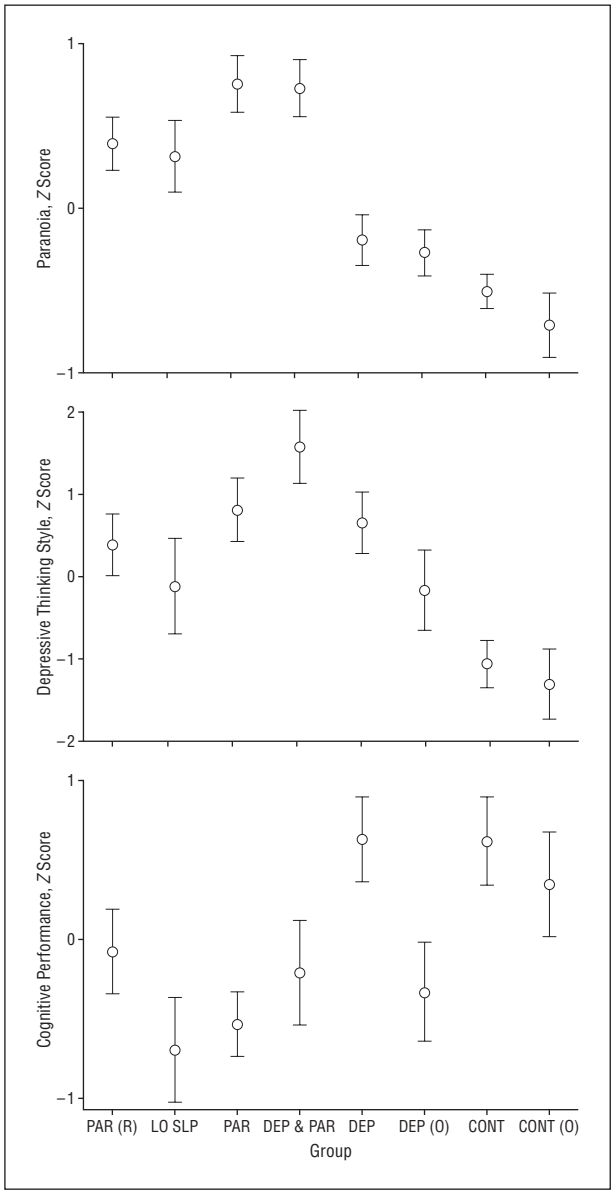

Figure 2. Estimated second-order factor scores by diagnostic group. Circles indicate means and bars indicate 95% confidence intervals. CONT indicates healthy controls; CONT (O), older healthy controls; DEP, patients with depression; DEP (O), older patients with depression; DEP & PAR, comorbid patients; LO SLP, late-onset schizophrenia-like psychosis; PAR, paranoid patient; PAR (R), remitted paranoid patient.

COMMENT

The major finding from this study was that 3 overarching cognitive and psychological processes were associated with paranoid delusions. The first was a construct that almost defines paranoia, the presence of persecutory beliefs and the anticipation of threat to the self. The second factor, which strongly correlated with the first, was a depressive or pessimistic thinking style, whereby participants reported low self-esteem, high levels of depression and anxiety, and assumed that the causes of negative events would be pervasive and persistent. A key construct that distinguished these 2 was cognitive performance, indicated by general intellectual performance, the ability to understand the mental states of other people, and the ability to formulate hypotheses on the basis of sequentially presented information. Cognitive performance was related negatively with paranoid beliefs but was not correlated with depressive thinking. However, emotion-related processes were more closely linked to paranoia than was cognitive performance. These findings are therefore consistent with recent research that points to the importance of emotion-related processes in positive schizophrenia symptoms.[2,89,90] The importance of self-esteem and attributional processes is partially consistent with our recent theoretical model of the processes involved in paranoid thinking.[3] However, external explanations for negative events are an important component of this model; these could not be measured with adequate reliability, a problem that other researchers have noted.[52,91] Chadwick et al[92] have also argued that self-esteem plays an important role in paranoid thinking but have distinguished between "poor me" delusions, in which the individual feels unjustly persecuted, and "bad me" delusions, in which the individual feels that persecution is deserved. Judgments of deservedness were not available for the entire sample, but in a subsample we found that schizophrenic patients are less likely to believe that their persecution is deserved than de-

©2009 American Medical Association. All rights reserved.
Downloaded From: http://archpsyc.jamanetwork.com/ on 10/20/2016

pressed patients, though a broad range of deservedness judgments are found in both groups.[37]

Enhanced anticipation of negative events appeared to be as closely indicative of paranoia as persecutory beliefs. However, with the exception of 2 previous investigations,[12,36] this aspect of paranoid thinking has not been closely studied. In a subset of the present sample, we reported that the anticipation of threat was elevated in paranoid patients, even when their recall of past threatening events was controlled for; hence, although paranoia is often associated with a history of victimization[93,94] and the preferential recall of negative events,[95,96] these factors do not seem to be sufficient to explain this phenomenon. In this context, it is relevant that paranoid beliefs can be provoked by dopamine agonists,[97] whereas threat anticipation in animals, as measured using a conditioned avoidance paradigm, is abolished by the administration of antipsychotic medication.[98,99] Hence, the current finding that threat anticipation is central to paranoia is consistent with accounts that posit a central role for midbrain dopamine neurons in the cognitive processes underlying positive symptoms.[100]

Our finding that cognitive performance is implicated in paranoia may be considered to be consistent with the many previous studies that have reported cognitive impairment in psychotic patients.[101] However, in contrast to the present findings, previous investigations of schizophrenic patients have not shown a close association between cognitive impairment and positive symptoms.[102,103] One important difference between the present investigation and previous studies is that we have investigated cognitive functioning in relation to the specific symptom of paranoia and not positive schizophrenia symptoms in general. Also, our findings suggest that current cognitive function is related to paranoia and carries no implication for whether or not more enduring neuropsychological impairments are involved. The 2 measures of general intellectual functioning that loaded most heavily on this factor, the matrix reasoning and the backward digit span test, can be regarded as measures of executive functioning. The findings are therefore consistent with previous studies that implicate executive dysfunction in psychosis.[104-107] It is perhaps not surprising that theory of mind proved to be very closely related to cognitive performance in our data, as this has consistently been reported in healthy participants.

The influence of executive functioning deficits may also cast light on the fact that, though many studies have reported a jumping to conclusions bias in patients with delusions,[22,108] we found no specific association between paranoia and jumping to conclusions bias after controlling for general cognitive functioning. Some studies of jumping to conclusions bias in patients with delusions have used only very brief measures of current intellectual performance, which may have underestimated the relationship with executive functioning.[19,20,109] A recent study[110] with a nonclinical sample reported that the previously significant relationship between paranoia and jumping to conclusions bias was removed by controlling for general intelligence (performance and verbal IQ).

The older depressed and older paranoid groups tended to report lower levels of depression than their younger counterparts. This is consistent with previous research[111] and is possibly due to more negative attitudes toward depression in the elderly.[112] Although age trends were observed in cognitive functioning, controlling for these had no substantive effect on the correlation structure of the higher-order latent variables.

The main strengths of our study were that we used a large, broadly defined sample that included a number of distinct diagnostic groups with persecutory delusions and measured a wide range of constructs previously implicated in paranoia, modeling these as latent traits to control for measurement error. Perhaps it is a limitation that some of the self-report measures required the ability to self-reflect. However, delusional beliefs by their nature can only be assessed by self-report, and the questionnaire used to measure paranoia (PDI) has been shown to have criterion validity in terms of distinguishing between clinical and nonclinical groups.[58] Our approach to modeling paranoia from the PDI items allowed the factor loadings to vary freely and therefore captured differences in the strengths of the relationships between each item and the latent paranoia trait; therefore, we obtained a true measure of paranoia severity rather than of the number of paranoid beliefs reported. Another limitation was that, to facilitate testing, we excluded patients with clear negative signs and overt thought disorder. There is no reason to believe that our results would not generalize to such patients, but this remains to be demonstrated. A more important limitation is that the study was cross-sectional and that we were only able to model between-person associations among our psychological measures. Within-person causal relationships between the relevant psychological processes are therefore suggested by the data but cannot be confirmed until additional studies in which these variables are experimentally manipulated have been carried out.

The findings have 2 main clinical implications. First, the results support the value of cognitive assessment in psychosis, as increasingly advocated by some commentators.[113] This kind of assessment may be important when designing psychological interventions for patients with paranoid delusions, which should be tailored to their cognitive abilities. A recent National Institute of Mental Health workshop[114] has recommended the addition of social cognitive measures to the Measurement and Treatment Research to Improve Cognition in Schizophrenia battery of cognitive assessments of psychotic patients, and our findings suggest that theory of mind measures may have some utility in this regard. Second, the findings highlight the importance of addressing emotion-related processes, such as anxiety, depression, and self-esteem, when treating paranoid patients. It is unlikely that present pharmaceutical interventions will be completely effective in this regard. Cognitive behavioral therapy, on the other hand, has been shown to be effective in addressing these processes in nonpsychotic patients.[115,116] Our findings are therefore consistent with recent clinical trial data that suggest that cognitive behavioral therapy may be an effective adjunctive treatment for patients with positive symptoms.[117,118] Although the cognitive performance difficulties of paranoid patients may be less amenable to conventional cognitive therapy, it is possible that they might be

©2009 American Medical Association. All rights reserved.
Downloaded From: http://archpsyc.jamanetwork.com/ on 10/20/2016

remediated by cognitive skills training approaches and in particular metacognitive training strategies that have shown some promise in the treatment of psychosis.[119,120] Indeed, the current findings suggest that therapeutic strategies that integrate these 2 approaches may be especially beneficial to paranoid patients.

Submitted for Publication: March 13, 2008; final revision received July 11, 2008; accepted September 9, 2008.
Author Affiliations: The School of Psychology, University of Bangor, Bangor, Wales (Dr Bentall); Department of Psychology, University of Sheffield, Sheffield, England (Dr Rowse); Institute for Social Change, University of Manchester, Manchester, England (Dr Shryane); The Department of Clinical Psychology, University of Liverpool, Liverpool, England (Dr Kinderman); The Institute of Psychiatry, Kings College London, London, England (Drs Howard and Blackwood and Ms Moore); and Division of Psychiatry, School of Community Health Sciences, University of Nottingham, Nottingham, England (Dr Corcoran).
Correspondence: Richard P. Bentall, PhD, School of Psychology, Adeilad Brigantia Bldg, Penrallt Road, Gwynedd LL57 2AS, Wales (richard.bentall@bangor.ac.uk).
Author Contributions: Dr Bentall takes responsibility for the integrity of the data and the accuracy of the data analysis. All authors had full access to all of the data in the study.
Financial Disclosure: None reported.
Funding/Support: This research was funded by grant GR064134MA from the Wellcome Trust.

REFERENCES

1. Cannon TD, Keller MC. Endophenotypes in the genetic analyses of mental disorders. *Annu Rev Clin Psychol*. 2006;2:267-290.
2. Bentall RP. *Madness Explained: Psychosis and Human Nature*. London, England: Penguin; 2003.
3. Bentall RP, Corcoran R, Howard R, Blackwood N, Kinderman P. Persecutory delusions: a review and theoretical integration. *Clin Psychol Rev*. 2001;21(8):1143-1192.
4. Freeman D, Garety PA, Kuipers E, Fowler D, Bebbington PE. A cognitive model of persecutory delusions. *Br J Clin Psychol*. 2002;41(pt 4):331-347.
5. Garety PA, Hemsley DR. The characteristics of delusional experience. *Eur Arch Psychiatry Neurol Sci*. 1987;236(5):294-298.
6. Jørgensen P, Jensen J. Delusional beliefs in first admitters: a clinical description. *Psychopathology*. 1994;27(1-2):100-112.
7. Ndetei DM, Vadher A. Frequency and clinical significance of delusions across cultures. *Acta Psychiatr Scand*. 1984;70(1):73-76.
8. Stompe T, Friedman A, Ortwein G, Strobl R, Chaudhry HR, Najam N, Chaudhry MR. Comparisons of delusions among schizophrenics in Austria and Pakistan. *Psychopathology*. 1999;32(5):225-234.
9. Goodwin FK, Jamison KR. *Manic-Depressive Illness*. Oxford, England: Oxford University Press; 1990.
10. Haltenhof H, Ulrich H, Blanenburg W. Themes of delusion in 84 patients with unipolar depression. *Krankenhauspsychiatrie*. 1999;10:87-90.
11. Freeman D, Garety PA, Bebbington PE, Smith B, Rollinson R, Fowler D, Kuipers E, Ray K, Dunn G. Psychological investigation of the structure of paranoia in a non-clinical population. *Br J Psychiatry*. 2005;186:427-435.
12. Corcoran R, Ciummins S, Rowse G, Moore E, Blackwood N, Howard R, Kinderman P, Bentall RP. Reasoning under uncertainty: heuristic judgments in patients with persecutory delusions or depression. *Psychol Med*. 2006;36(8):1109-1118.
13. Bentall RP, Young HF. Sensible-hypothesis-testing in deluded, depressed and normal subjects. *Br J Psychiatry*. 1996;168(3):372-375.
14. Seltzer J, Conrad C, Cassens G. Neuropsychological profiles in schizophrenia: paranoid versus undifferentiated distinctions. *Schizophr Res*. 1997;23(2):131-138.
15. Savage RM, Jackson WT, Sourathathone CM. A brief neuropsychological testing battery for evaluating patients with schizophrenia. *Community Ment Health J*. 2003;39(3):253-262.
16. Hill SK, Ragland D, Gur RC, Gur RE. Neuropsychological differences among empirically derived clinical subtypes of schizophrenia. *Neuropsychology*. 2001;15(4):492-501.
17. Zalewski C, Johnson-Selfridge MT, Ohriner S, Zarrella K, Seltzer JC. A review of neuropsychological differences between paranoid and nonparanoid schizophrenia patients. *Schizophr Bull*. 1998;24(1):127-145.
18. Huq SF, Garety PA, Hemsley DR. Probabilistic judgements in deluded and nondeluded subjects. *Q J Exp Psychol A*. 1988;40(4):801-812.
19. Garety PA, Hemsley DR, Wessely S. Reasoning in deluded schizophrenic and paranoid patients: biases in performance on a probabilistic inference task. *J Nerv Ment Dis*. 1991;179(4):194-201.
20. Garety PA, Freeman D, Jolley S, Dunn G, Bebbington PE, Fowler DG, Kuipers E, Dudley R. Reasoning, emotions and delusional conviction in psychosis. *J Abnorm Psychol*. 2005;114(3):373-384.
21. Dudley REJ, John CH, Young AW, Over DE. Normal and abnormal reasoning in people with delusions. *Br J Clin Psychol*. 1997;36(pt 2):243-258.
22. Dudley REJ, Over DE. People with delusions jump to conclusions: a theoretical account of research findings on the reasoning of people with delusions. *Clin Psychol Psychother*. 2003;10(5):263-274.
23. Corcoran R, Rowse G, Moore R, Blackwood N, Kinderman P, Howard R, Cummins S, Bentall RP. A transdiagnostic investigation of 'theory of mind' and 'jumping to conclusions' in patients with persecutory delusions. *Psychol Med*. 2008;38(11):1577-1583.
24. McKay R, Langdon R, Coltheart M. Jumping to delusions? paranoia, probabilistic reasoning and need for closure. *Cognit Neuropsychiatry*. 2007;12(4):362-376.
25. Corcoran R, Mercer G, Frith CD. Schizophrenia, symptomatology and social inference: investigating 'theory of mind' in people with schizophrenia. *Schizophr Res*. 1995;17(1):5-13.
26. Frith CD, Corcoran R. Exploring 'theory of mind' in people with schizophrenia. *Psychol Med*. 1996;26(3):521-530.
27. Corcoran R, Cahill C, Frith CD. The appreciation of visual jokes in people with schizophrenia: a study of 'mentalizing' ability. *Schizophr Res*. 1997;24(3):319-327.
28. Craig JS, Craig F, Hatton C, Bentall RP. Persecutory beliefs, attributions and theory of mind: comparison of patients with paranoid delusions, Asperger's syndrome and healthy controls. *Schizophr Res*. 2004;69(1):29-33.
29. Randall F, Corcoran R, Day JC, Bentall RP. Attention, theory of mind, and causal attributions in people with persecutory delusions: a preliminary investigation. *Cognit Neuropsychiatry*. 2003;8(4):287-294.
30. Harrington L, Langdon R, Siegert R, McClure J. Schizophrenia, theory of mind, and persecutory delusions. *Cognit Neuropsychiatry*. 2005;10(2):87-104.
31. Moore R, Blackwood N, Corcoran R, Rowse G, Kinderman P, Bentall RP, Howard R. Misunderstanding the intentions of others: an exploratory study of the cognitive etiology of persecutory delusions in very late-onset schizophrenia-like psychosis. *Am J Geriatr Psychiatry*. 2006;14(5):410-418.
32. Drury VM, Robinson EJ, Birchwood M. 'Theory of mind' skills during an acute episode of psychosis and following recovery. *Psychol Med*. 1998;28(5):1101-1112.
33. Sarfati Y, Hardy-Bayles MC, Brunet E, Widloecher D. Investigating theory of mind in schizophrenia: influence of verbalization in disorganized and nondisorganized patients. *Schizophr Res*. 1999;37(2):183-190.
34. Harrington L, Siegert R, McClure JN. Theory of mind in schizophrenia: a critical review. *Cognit Neuropsychiatry*. 2005;10(4):249-286.
35. Brüne M. 'Theory of mind' in schizophrenia: a review of the literature. *Schizophr Bull*. 2005;31(1):21-42.
36. Kaney S, Bowen-Jones K, Dewey ME, Bentall RP. Two predictions about paranoid ideation: deluded, depressed and normal participants' subjective frequency and consensus judgments for positive, neutral and negative events. *Br J Clin Psychol*. 1997;36(pt 3):349-364.
37. Bentall RP, Kinderman P, Howard R, Blackwood N, Cummins S, Rowse G, Knowles R, Corcoran R. Paranoid delusions in schizophrenia spectrum disorders and depression: the transdiagnostic role of expectations of negative events and negative self-esteem. *J Nerv Ment Dis*. 2008;196(5):375-383.
38. Kaney S, Bentall RP. Persecutory delusions and attributional style. *Br J Med Psychol*. 1989;62(pt 2):191-198.
39. Candido CL, Romney DM. Attributional style in paranoid vs depressed patients. *Br J Med Psychol*. 1990;63(pt 4):355-363.
40. Fear C, Sharp H, Healy D. Cognitive processes in delusional disorder. *Br J Psychiatry*. 1996;168(1):61-67.
41. Kinderman P, Bentall RP. Causal attributions in paranoia and depression: in ter-

©2009 American Medical Association. All rights reserved.
Downloaded From: http://archpsyc.jamanetwork.com/ on 10/20/2016

nal, personal, and situational attributions for negative events. *J Abnorm Psychol*. 1997;106(2):341-345.
42. Humphreys L, Barrowclough C. Attributional style, defensive functioning and persecutory delusions: symptom-specific or general coping strategy? *Br J Clin Psychol*. 2006;45(pt 2):231-246.
43. Martin JA, Penn DL. Social cognition and subclinical paranoid ideation. *Br J Clin Psychol*. 2001;40(pt 3):261-265.
44. Martin JA, Penn DL. Attributional style in schizophrenia: an investigation in outpatients with and without persecutory delusions. *Schizophr Bull*. 2002;28 (1):131-142.
45. McKay R, Langdon R, Coltheart M. Paranoia, persecutory delusions and attributional biases. *Psychiatry Res*. 2005;136(2-3):233-245.
46. Janssen I, Versmissen D, Campo JA, Myin-Germeys I, van Os J, Krabbendam L. Attribution style and psychosis: evidence for an externalizing bias in patients but not in individuals at high risk. *Psychol Med*. 2006;36(6):771-778.
47. Freeman D, Garety P, Fowler D, Kuipers E, Dunn G, Bebbington P, Hadley C. The London-East Anglia randomized controlled trial of cognitive-behaviour therapy for psychosis IV: self-esteem and persecutory delusions. *Br J Clin Psychol*. 1998; 37(pt 4):415-430.
48. Bowins B, Shugar G. Delusions and self-esteem. *Can J Psychiatry*. 1998;43(2): 154-158.
49. Lyon HM, Kaney S, Bentall RP. The defensive function of persecutory delusions: evidence from attribution tasks. *Br J Psychiatry*. 1994;164(5):637-646.
50. McKay R, Langdon R, Coltheart M. The defensive function of persecutory delusions: an investigation using the implicit association test. *Cognit Neuropsychiatry*. 2007;12(1):1-24.
51. Moritz S, Werner R, von Collani G. The inferiority complex in paranoia readdressed: a study with the Implicit Association Test. *Cognit Neuropsychiatry*. 2006;11(4):402-415.
52. Reivich K. The measurement of explanatory style. In: Buchanan GM, Seligman MEP, eds. *Explanatory Style*. Hillsdale, NJ: Lawrence Erlbaum; 1995:21-48.
53. Perner J, Lang B. Development of theory of mind and executive control. *Trends Cogn Sci*. 1999;3(9):337-344.
54. Menon M, Pomarol-Clotet E, McKenna PJ, McCarthy RA. Probabilistic reasoning in schizophrenia: a comparison of the performance of deluded and nondeluded schizophrenic patients and exploration of possible cognitive underpinnings. *Cognit Neuropsychiatry*. 2006;11(6):521-536.
55. Mezulis AH, Abramson LY, Hyde JS, Hankin BL. Is there a universal positivity bias in attributions? a meta-analytic review of individual, developmental and cultural differences in the self-serving attributional bias. *Psychol Bull*. 2004; 130(5):711-747.
56. Howard R, Rabins PV, Seeman MV, Jeste DV; The International Late-Onset Schizophrenia Group. Late-onset schizophrenia and very-late-onset schizophrenia-like psychosis: an international consensus. *Am J Psychiatry*. 2000;157(2): 172-178.
57. World Health Organization. *Schedules for Clinical Assessment in Neuropsychiatry*. Geneva, Switzerland: World Health Organization; 1999.
58. Peters ER, Joseph SA, Garety PA. Measurement of delusional ideation in the normal population: introducing the PDI (Peters et al. Delusions Inventory). *Schizophr Bull*. 1999;25(3):553-576.
59. Buchanan RW, Strauss ME, Breier A, Kirkpatrick B, Carpenter WT Jr. Attentional impairments in deficit and nondeficit forms of schizophrenia. *Am J Psychiatry*. 1997;154(3):363-370.
60. Goldberg TE, Weinberger DR. Thought disorder in schizophrenia: a reappraisal of older formulations and an overview of some recent studies. *Cognit Neuropsychiatry*. 2000;5(1):1-19.
61. Zigmond AS, Snaith RP. The Hospital Anxiety and Depression Scale. *Acta Psychiatr Scand*. 1983;67(6):361-370.
62. Bjelland I, Dahl AA, Haug TT, Neckelman D. The validity of the Hospital Anxiety and Depression Scale: an updated literature review. *J Psychosom Res*. 2002; 52(2):69-77.
63. Nugent WR, Thomas JW. Validation of a clinical measure of self-esteem. *Res Soc Work Pract*. 1993;3(2):191-207.
64. Gureje O, Harvey C, Herman H. Self-esteem in patients who have recovered from psychosis: profile and relationship to quality of life. *Aust N Z J Psychiatry*. 2004; 38(5):334-338.
65. Peterson C, Semmel A, Von Baeyer C, Abramson LY, Metalsky GI, Seligman MEP. The Attributional Style Questionnaire. *Cognit Ther Res*. 1982;6:287-300.
66. Kinderman P, Bentall RP. A new measure of causal locus: The internal, personal and situational attributions questionnaire. *Pers Individ Dif*. 1996;20: 261-264.
67. Phillips LD, Edwards W. Conservatism in a simple probability inference task. *J Exp Psychol*. 1966;72(3):346-354.
68. Peters E, Garety P. Cognitive functioning in delusions: a longitudinal analysis. *Behav Res Ther*. 2006;44(4):481-514.
69. Dudley REJ, John CH, Young AW, Over DE. The effect of self-referent material on the reasoning of people with delusions. *Br J Clin Psychol*. 1997;36(pt 4): 575-584.
70. Wechsler D. *Wechsler Abbreviated Scale of Intelligence*. San Antonio, TX: The Psychological Corporation; 1999.
71. Bentler PM. Multivariate analysis with latent variables: causal modelling. *Annu Rev Psychol*. 1980;31:419-456.
72. Lord FM. Large-sample covariance analysis when the control variable is fallible. *J Am Stat Assoc*. 1960;55:307-321.
73. Muthen LK, Muthen BO. *Mplus User's Guide*. 4th ed. Los Angeles, CA: Muthen & Muthen; 1998-2000.
74. Flora DB, Curran PJ. An empirical evaluation of alternative methods of estimation for confirmatory factor analysis with ordinal data. *Psychol Methods*. 2004; 9(4):466-491.
75. Little RJA, Rudin DB. *Statistical Analysis With Missing Data*. 2nd ed. Hoboken, NJ: John Wiley & Sons; 2002.
76. Tanaka JS. "How big is big enough?": sample size and goodness of fit in structural equation models with latent variables. *Child Dev*. 1987;58:134-146.
77. Tucker LR, Lewis C. A reliability coefficient for maximum likelihood factor analysis. *Psychometrika*. 1973;38(1):1-10.
78. Bentler PM. Comparative fit indexes in structural models. *Psychol Bull*. 1990;107 (2):238-246.
79. Hu L, Bentler PM. Cutoff criteria for fit indexes in covariance structure analysis: conventional criteria versus new alternatives. *Struct Equ Modeling*. 1999; 6(1):1-55.
80. Steiger JH. Structural model evaluation and modification: an interval estimation approach. *Multivariate Behav Res*. 1990;25(2):173-180.
81. Birnbaum A. Some latent trait models and their use in inferring an examinee's ability. In: Lord FM, Novick MR, eds. *Structural Theories of Mental Test Scores*. New York, NY: Addison-Wesly; 1968:395-479.
82. Samejima F. Estimation of latent ability using a response pattern of graded scores. *Psychometrika*. 1969;34(4):100-114.
83. Hewitt AK, Foxcroft DR, MacDonald J. Multitrait-multimethod confirmatory factor analysis of the Attributional Style Questionnaire. *Pers Individ Dif*. 2004; 37(7):1483-1491.
84. Higgins NC, Zumbo BD, Hay JL. Construct validity of attributional style: modelling context-dependent item sets in the Attributional Style Questionnaire. *Educ Psychol Meas*. 1999;59:804-820.
85. MacCallum RC, Wegener DT, Uchino BN, Fabrigar LR. The problem of equivalent models in applications of covariance structure analysis. *Psychol Bull*. 1993; 114(1):185-199.
86. Satorra A, Bentler PM. Corrections to test statistic and standard errors in covariance structure analysis. In: Von Eye A, Clogg CC, eds. *Analysis of Latent Variables in Developmental Research*. Newbury Park, CA: Sage; 1994:399-419.
87. Lindley DV, Smith AFM. Bayes estimates for the linear model. *J R Stat Soc Ser B*. 1972;34:1-41.
88. Skrondal A, Rabe-Hesketh S. *Generalized Latent Variable Modeling: Multilevel, Longitudinal and Structural Equation Models*. Boca Raton, FL: Chapman and Hall; 2004.
89. Ciompi L. Is schizophrenia an affective disease? In: Flack WF, Laird JD, eds. *Emotions in Psychopathology*. New York, NY: Oxford University Press; 1998: 283-297.
90. Garety PA, Kuipers E, Fowler D, Freeman D, Bebbington PE. A cognitive model of positive symptoms of psychosis. *Psychol Med*. 2001;31(2):189-195.
91. White PA. Ambiguity in the internal/external distinction in causal attribution. *J Exp Soc Psychol*. 1991;27:259-270.
92. Chadwick PD, Trower P, Juusti-Butler T-M, Maguire N. Phenomenological evidence for two types of paranoia. *Psychopathology*. 2005;38(6):327-333.
93. Janssen I, Hanssen M, Bak M, Bijl RV, De Graaf R, Vollenberg W, McKenzie K, van Os J. Discrimination and delusional ideation. *Br J Psychiatry*. 2003; 182:71-76.
94. Mirowsky J, Ross CE. Paranoia and the structure of powerlessness. *Am Sociol Rev*. 1983;48(2):228-239.
95. Bentall RP, Kaney S, Bowen-Jones K. Persecutory delusions and recall of threat-related, depression-related and neutral words. *Cognit Ther Res*. 1995;19 (4):331-343.
96. Kaney S, Wolfenden M, Dewey ME, Bentall RP. Persecutory delusions and recall of threatening propositions. *Br J Clin Psychol*. 1992;31(pt 1):85-87.
97. Angrist BM, Gershon S. The phenomonenology of experimentally induced amphetamine psychosis: preliminary observations. *Biol Psychiatry*. 1970;2 (2):95-107.

©2009 American Medical Association. All rights reserved.
Downloaded From: http://archpsyc.jamanetwork.com/ on 10/20/2016

98. Moutoussis M, Williams J, Dayan P, Bentall RP. Persecutory delusions and the conditioned avoidance paradigm: towards an integration of the psychology and biology of paranoia. *Cognit Neuropsychiatry*. 2007;12(6):495-510.
99. Smith A, Li M, Becker S, Kapur S. A model of antipsychotic action in conditioned avoidance: a computational approach. *Neuropharmacology*. 2004; 29(6):1040-1049.
100. Kapur S, Mizrahi R, Li M. From dopamine to salience to psychosis: linking biology, pharmacology and phenomenology of psychosis. *Schizophr Res*. 2005; 79(1):59-68.
101. Heinrichs RW, Zakzanis KK. Neurocognitive deficit in schizophrenia: a quantitative review of the evidence. *Neuropsychology*. 1998;12(3):426-445.
102. Green MF, Nuechterlein KH. Should schizophrenia be treated as a neurocognitive disorder? *Schizophr Bull*. 1999;25(2):309-319.
103. Keefe RSE, Bilder RM, Harvey PD, Davis SM, Palmer BW, Gold JM, Meltzer HY, Green MF, Miller D, Canive JM, Adler LW, Manschreck TC, Swartz M, Rosenheck R, Perkins DO, Walker TM, Stroup TS, McEvoy JP, Lieberman JA. Baseline neurocognitive deficits in the CATIE schizophrenia trial. *Neuropsychopharmacology*. 2006;31(9):2033-2046.
104. Bustini M, Stratta P, Daneluzzo E, Polloce R, Prosperini P, Rossi A. Tower of Hanoi and WCST performance in schizophrenia: problem-solving capacity and clinical correlates. *J Psychiatr Res*. 1999;33(3):285-290.
105. Cohen JD, Braver TS, O'Reilly RC. A computational approach to prefrontal cortex, cognitive control and schizophrenia: recent developments and current challenges. *Philos Trans R Soc Lond B Biol Sci*. 1996;351(1346):1515-1527.
106. Joyce EM, Hutton SB, Mutsatasa SH, Barnes TRE. Cognitive heterogeneity in first episode schizophrenia. *Br J Psychiatry*. 2005;187:516-522.
107. Rushe TM, Morris RG, Miotto EC, Feigenbaum JD, Woodruff PWR, Murray RM. Problem solving and spatial working memory in patients with schizophrenia and with focal frontal and temporal lobe lesions. *Schizophr Res*. 1999;37 (1):21-33.
108. Garety PA, Freeman D. Cognitive approaches to delusions: a critical review of theories and evidence. *Br J Clin Psychol*. 1999;38(pt 2):113-154.
109. Moritz S, Woodward TS. Jumping to conclusions in delusional and nondelusional schizophrenic patients. *Br J Clin Psychol*. 2005;44(pt 2):193-207.
110. Van Dael F, Versmissen D, Janssen I, Myin-Germeys I, Van Os J, Krabbendam L. Data gathering: biased in psychosis? *Schizophr Bull*. 2006;32(2):341-351.
111. Lyness JM, Cox C, Curry J, Conwell Y, King DA, Caine ED. Older age and the under-reporting of depressive symptoms. *J Am Geriatr Soc*. 1995;43(3): 216-221.
112. Davidson KM, Connery H. A Scottish survey of attitudes to depression in older and younger adults. *J Ment Health*. 2003;12:505-512.
113. Keefe RSE, Goldberg TE, Harvey PD, Gold JM, Poe M, Coughenour L. The Brief Assessment of Cognition in Schizophrenia: reliability, sensitivity, and comparison with a standard neurocognitive battery. *Schizophr Res*. 2004;68(2-3): 283-297.
114. Green MF, Penn DL, Bentall RP, Carpenter WT, Gaebel W, Gur RC, Kring AM, Park S, Silverstein SM, Heinssen R. Social cognition in schizophrenia: an NIMH workshop on definitions, assessment, and research opportunities. *Schizophr Bull*. 2008;34(6):1211-1220.
115. Dobson KS. A meta-analysis of the efficacy of cognitive therapy for depression. *J Consult Clin Psychol*. 1989;57(3):414-419.
116. DeRubeis RJ, Hollon SD, Amsterdam JD, Shelton RC, Young PR, Salomon RM, O'Reardon JP, Lovett ML, Gladis MM, Brown LL, Gallop R. Cognitive therapy vs medication in the treatment of moderate to severe depression. *Arch Gen Psychiatry*. 2005;62(4):409-416.
117. Tarrier N, Wykes T. Is there evidence that cognitive behaviour therapy is an effective treatment for schizophrenia? a cautious or cautionary tale? *Behav Res Ther*. 2004;42(12):1377-1401.
118. Turkington D, Weiden P. Cognitive behavior therapy for schizophrenia. *Am J Psychiatry*. 2006;163(3):365-373.
119. Wykes T, Reeder C, Corner J, Williams C, Everitt B. The effects of neurocognitive remediation on executive processing in patients with schizophrenia. *Schizophr Bull*. 1999;25(2):291-307.
120. Moritz S, Woodward T. Metacognitive training in schizophrenia: from basic research to knowledge translation and intervention. *Curr Opin Psychiatry*. 2007; 20(6):619-625.

©2009 American Medical Association. All rights reserved.
Downloaded From: http://archpsyc.jamanetwork.com/ on 10/20/2016